Property of Fop s.r.l. Unipersonale

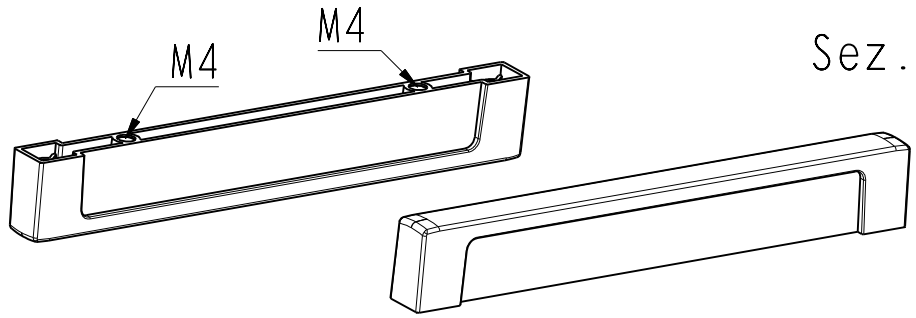

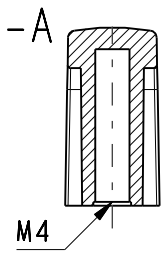

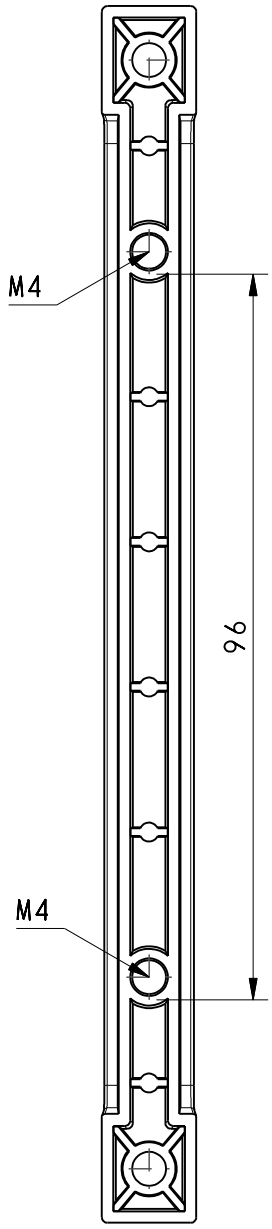

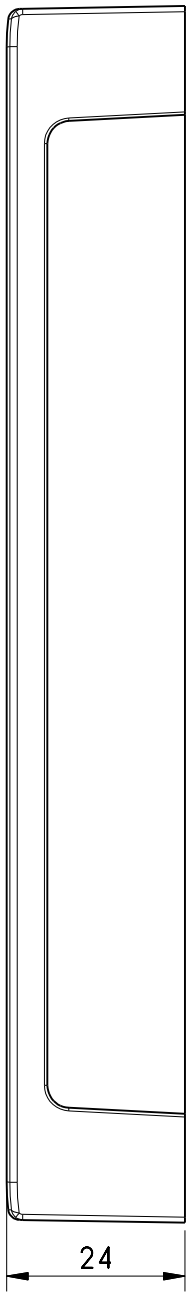

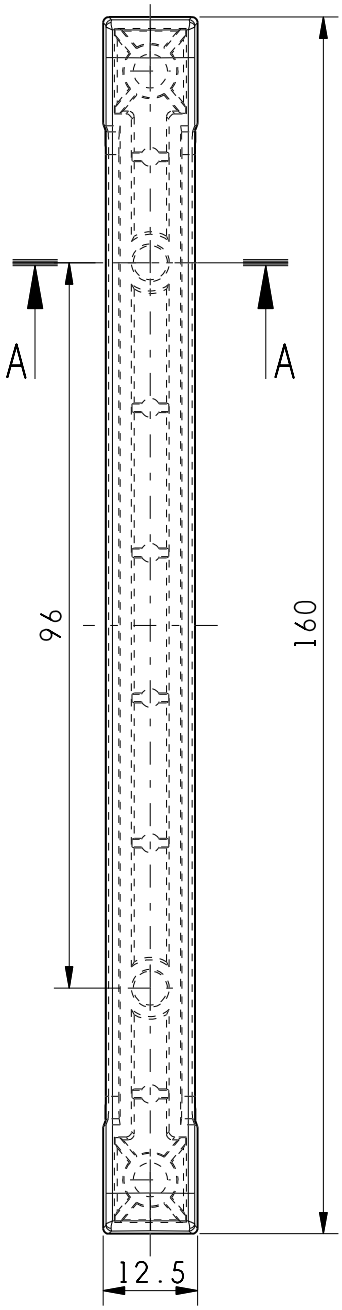

MATERIAL: ABS

REV	POSITION	DESCRIPTION	DATE	NAME

FOP CANALI	UNIT mm	TYPE DRAFT DRAWING	CREATED BY ****	FORMAT A4	REVISION ***
	FILENAME ****		CREATION DATE ****	SCALE 1 : 1	SHEET 1 / 1
	CLIENT ****		PART CODE ****		
ART. 0999			TOOL CODE ****		
PROJECT NAME ****			CHECKED BY ****	CHECKED_DATE ****	

FOP s.r.l. Unipersonale
via G. Pascoli, 18 - 31040 CESSALTO (TV) ITALY
tel: +39.0421.328741 - fax: +39.0421.328064